Dunbarton™ CORPORATION
868 MURRAY ROAD, DOTHAN, AL 36303

ACHIEVER
STEEL FRAME SYSTEM
with Sidelite(s)
Utilizing a Fiberglass Door Panel
INSWING
"NON-IMPACT"

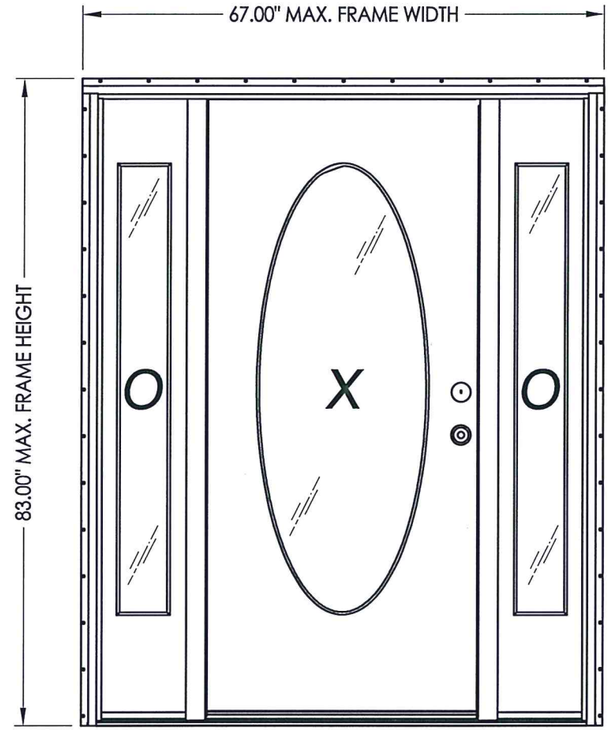

Oval Glazed

Opaque

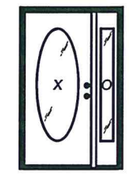

Oval Glazed

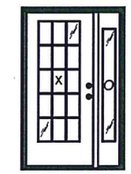

Rectanglar Glazed

1/4 Lite Glazed

Opaque

Rectanglar Glazed

1/4 Lite Glazed

GENERAL NOTES

1. This product has been evaluated and is in compliance with the 7th Edition (2020) Florida Building Code (FBC) structural requirements excluding the "High Velocity Hurricane Zone" (HVHZ).
2. Product anchors shall be as listed and spaced as shown on details. Anchor embedment to base material shall be beyond wall dressing or stucco.
3. When used in areas requiring wind borne debris protection this product is required to be protected with an impact resistant covering that complies with FBC Sections 1609.1.2 & R301.2.1.2.
4. Site conditions that deviate from the details of this drawing require further engineering analysis by a licensed engineer or registered architect.

TABLE OF CONTENTS

SHEET #	DESCRIPTION
1	Typical elevations, design pressures & general notes
2	Door panel details
3	Door panel details
4	Door panel details
5	Sidelite panel details
6	Horizontal cross section
7	Horizontal cross section
8	Vertical cross sections
9	Vertical cross sections
10	Buck anchoring
11	Frame anchoring
12	Frame anchoring
13	Bill of materials and components

DOOR TYPE	MAX. OVERALL FRAME DIMENSION	OVERALL DOOR PANEL DIMENSION	OVERALL SIDELITE DIMENSION	DESIGN PRESSURE (PSF)	
				POSITIVE	NEGATIVE
Oval Glazed	67.00" X 83.00"	35.75" X 79.00"	12.13" X 79.00"	+45.0	-50.0
Rectangular Glazed				+45.0	-50.0
1/4 Lite Glazed				+50.0	-55.0
Opaque				+56.0	-56.0

L. F. SCHMIDT LICENSE No. 43409 STATE OF FLORIDA PROFESSIONAL ENGINEER

August 11, 2020

Documents Prepared By:
Lyndon F. Schmidt
P.E. No. 43409

RW BUILDING CONSULTANTS, INC.
P.O. Box 230, Valrico, FL 33595
Phone No.: 813.659.9197
FBPE Registry No. 9813

PRODUCT: DUNBARTON ACHIEVER STEEL FRAME SYSTEM

PART OR ASSEMBLY: TYPICAL ELEVATIONS, DESIGN PRESSURES & GENERAL NOTES

NO.	DATE	REVISIONS	BY
3	8/11/20	UPDATE TO 7TH ED. (2020) FBC	DAC
2	9/29/17	UPDATE TO 6TH ED. (2017) FBC	LFS
1	3/23/15	UPDATE TO 5TH ED. (2014) FBC	JK

DATE: 03/14/12
SCALE: N.T.S.
DWG. BY: JK
CHK. BY: LFS
DRAWING NO.: FL-15362.5
SHEET 1 OF 13

© 2012 R.W. BUILDING CONSULTANTS INC.

\\dc01\rwbc\Clients\Dunbarton Permanent\A - Florida Product Approvals\FL-15362 - Swinging Ext Doors - Redituff and Achiever\C - Drawings\FL-15362 (2020)\FL-15362.1-6.dwg

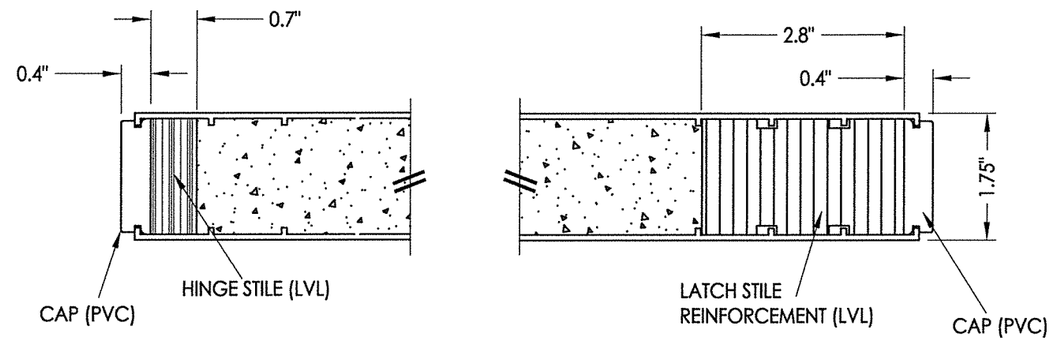

1/2 **HORIZONTAL CROSS SECTION**

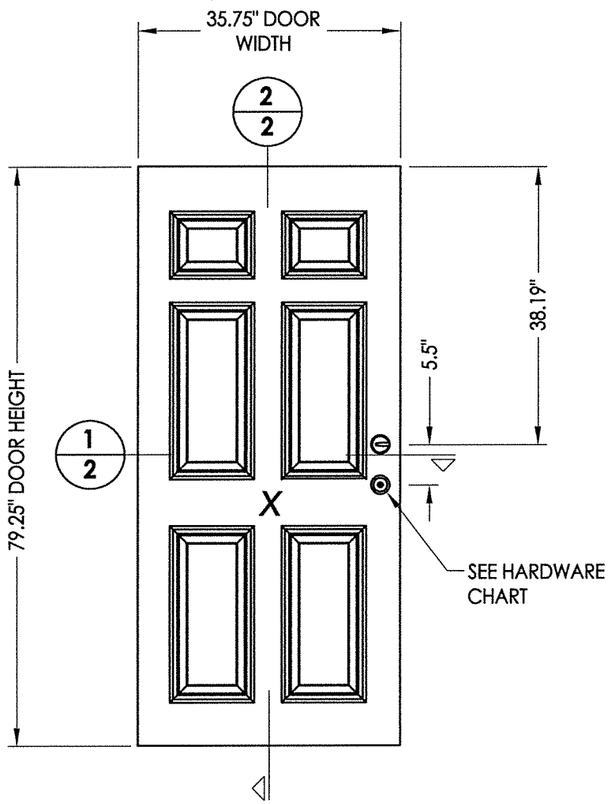

PLASTPRO DOOR PANEL
(Fiberglass)

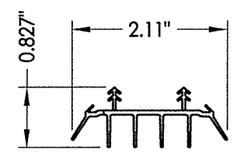

2A **DOOR SWEEP**

HARDWARE TABLE	
MANUFACTURER	MODEL
PAMEX	KNOB: FT3 SERIES DEADBOLT: FD2 SERIES

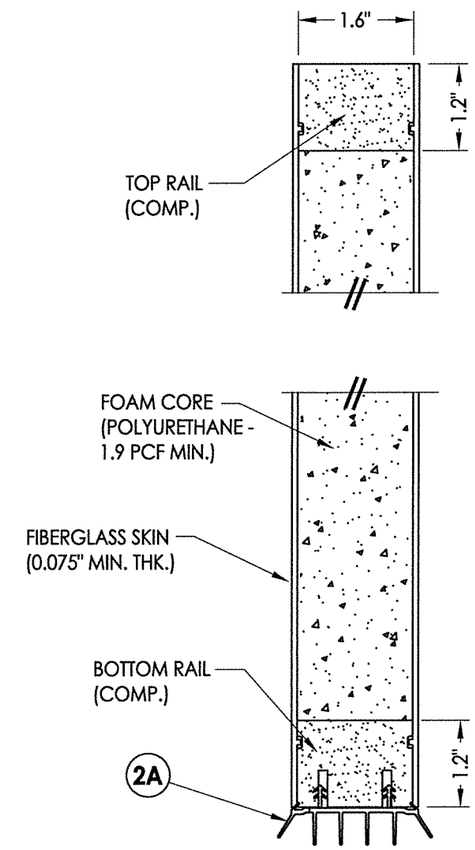

2/2 **VERTICAL CROSS SECTION**

L. F. SCHMIDT
LICENSE
No. 43409
STATE OF FLORIDA
PROFESSIONAL ENGINEER

August 11, 2020

Documents Prepared By:
Lyndon F. Schmidt
P.E. No. 43409

RW BUILDING CONSULTANTS, INC.
P.O. Box 230, Valrico, FL 33595
Phone No.: 813.659.9197
FBPE Registry No. 9813

PRODUCT: DUNBARTON ACHEIVER STEEL FRAME SYSTEM

PART OR ASSEMBLY: DOOR PANEL DETAILS

REVISIONS

NO.	DATE		BY
3	8/11/20	UPDATE TO 7th ED. (2020) FBC	DAC
2	9/29/17	UPDATE TO 6TH ED. (2017) FBC	LFS
1	3/23/15	UPDATE TO 5TH ED. (2014) FBC	JK

DATE: 03/14/12
SCALE: N.T.S.
DWG. BY: JK
CHK. BY: LFS
DRAWING NO.: FL-15362.5
SHEET 2 OF 13

© 2012 R.W. BUILDING CONSULTANTS INC.

\\dc01\rwbc\Clients\Dunbarton Permanent\A - Florida Product Approvals\FL-15362 - Swinging Ext Doors - Redituff and Achiever\C - Drawings\FL-15362 (2020)\FL-15362.1-6.dwg

HARDWARE TABLE	
MANUFACTURER	MODEL
PAMEX	KNOB: FT3 SERIES DEADBOLT: FD2 SERIES

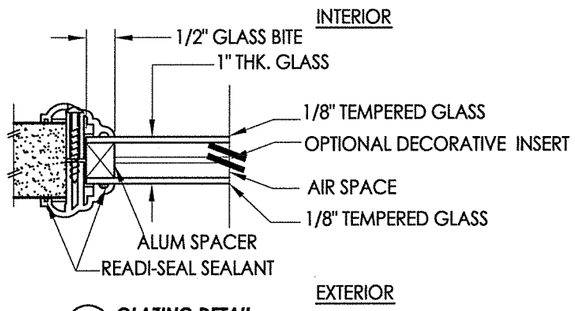

G2 GLAZING DETAIL
ODL HP Lite Frame

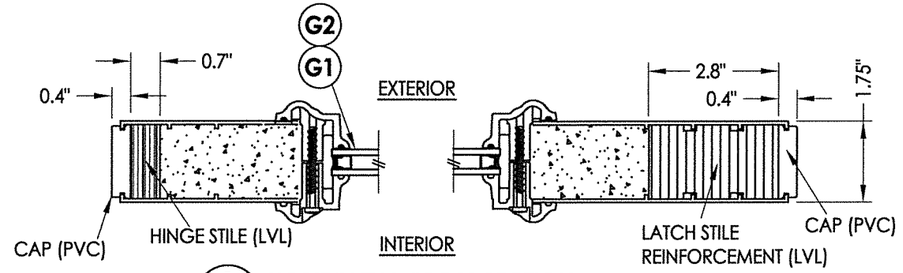

1/3 HORIZONTAL CROSS SECTION

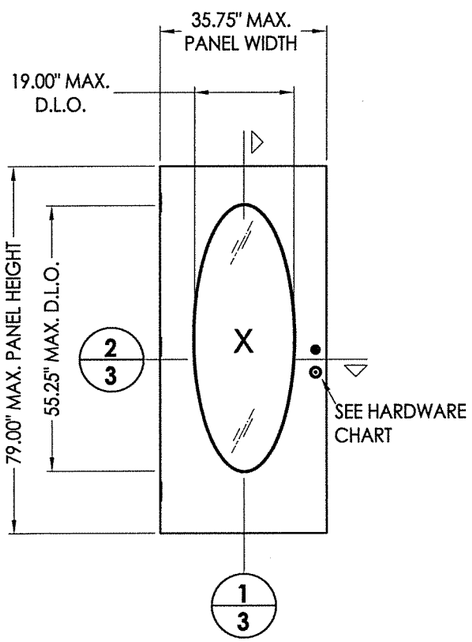

PLASTPRO FIBERGLASS DOOR PANEL
(Oval Glazed)

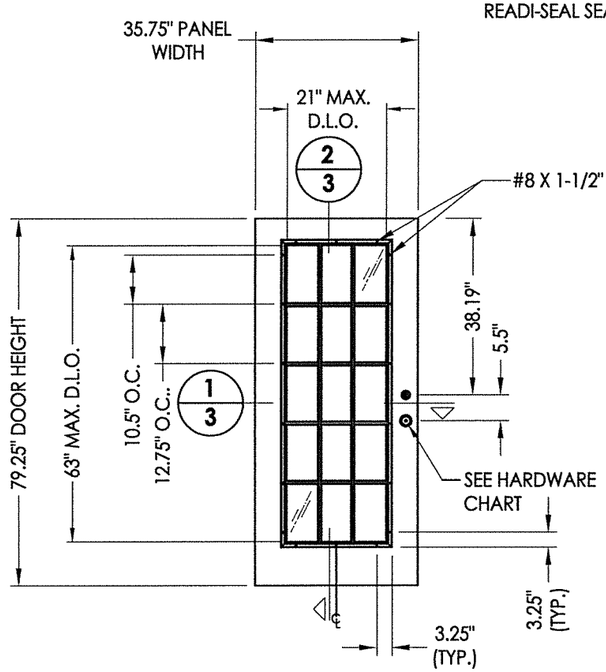

PLASTPRO FIBERGLASS DOOR PANEL
(Rectangular Glazed)

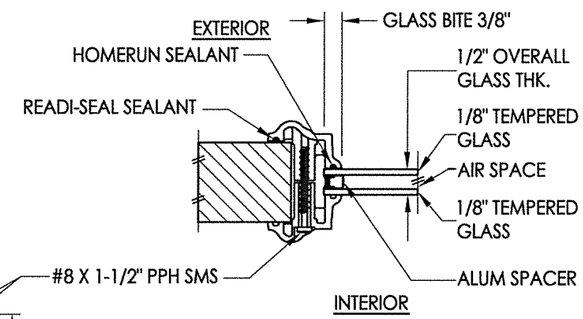

G1 GLAZING DETAIL
ODL HP Lite Frame

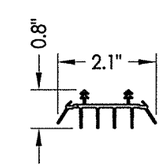

3A DOOR SWEEP

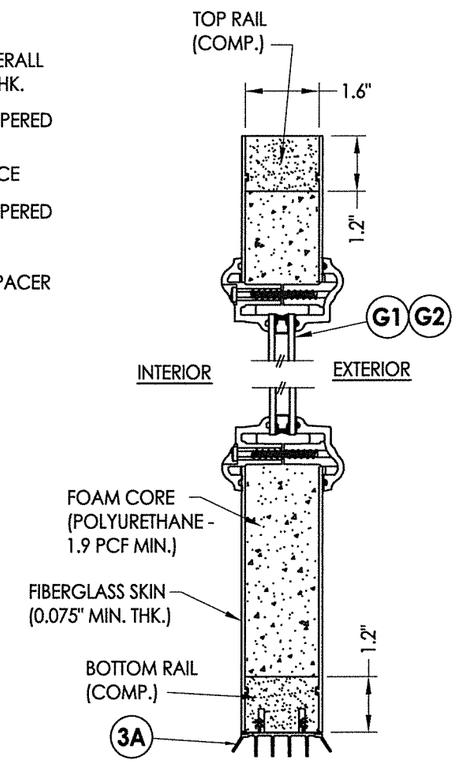

2/3 VERTICAL CROSS SECTION

L. F. SCHMIDT
LICENSE
No. 43409
STATE OF FLORIDA
PROFESSIONAL ENGINEER

August 11, 2020

Documents Prepared By:
Lyndon F. Schmidt
P.E. No. 43409

RW BUILDING CONSULTANTS, INC.
P.O. Box 230, Valrico, FL 33595
Phone No.: 813.659.9197
FBPE Registry No. 9813

PRODUCT: DUNBARTON ACHIEVER STEEL FRAME SYSTEM

PART OR ASSEMBLY: DOOR PANEL DETAILS

NO.	DATE	REVISIONS	BY
3	8/11/20	UPDATE TO 7th ED. (2020) FBC	DAC
2	9/29/17	UPDATE TO 6TH ED. (2017) FBC	LFS
1	3/23/15	UPDATE TO 5TH ED. (2014) FBC	JK

DATE: 03/14/12
SCALE: N.T.S.
DWG. BY: JK
CHK. BY: LFS
DRAWING NO.: FL-15362.5
SHEET 3 OF 13

© 2012 R.W. BUILDING CONSULTANTS INC.

\\dc01\rwbc\Clients\Dunbarton Permanent\A - Florida Product Approvals\FL-15362 - Swinging Ext Doors - Redituff and Achiever\C - Drawings\FL-15362 (2020)\FL-15362.1-6.dwg

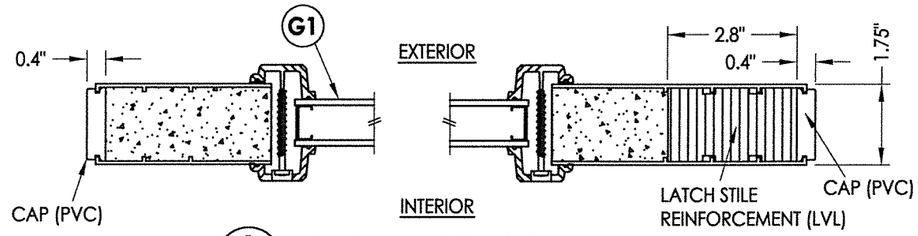

1/4 HORIZONTAL CROSS SECTION

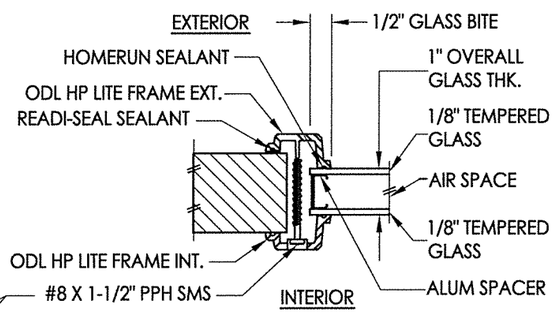

G1 GLAZING DETAIL

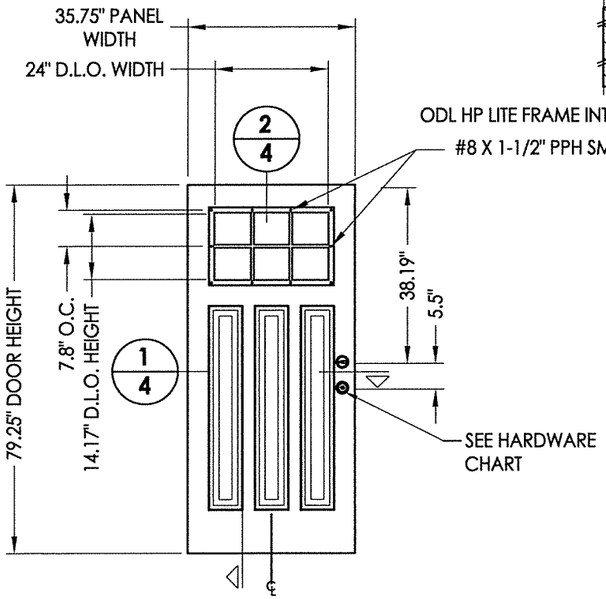

PLASTPRO DOOR PANEL
(Fiberglass)

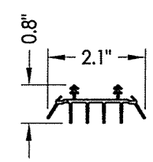

4A DOOR SWEEP

HARDWARE TABLE	
MANUFACTURER	MODEL
PAMEX	KNOB: FT3 SERIES DEADBOLT: FD2 SERIES

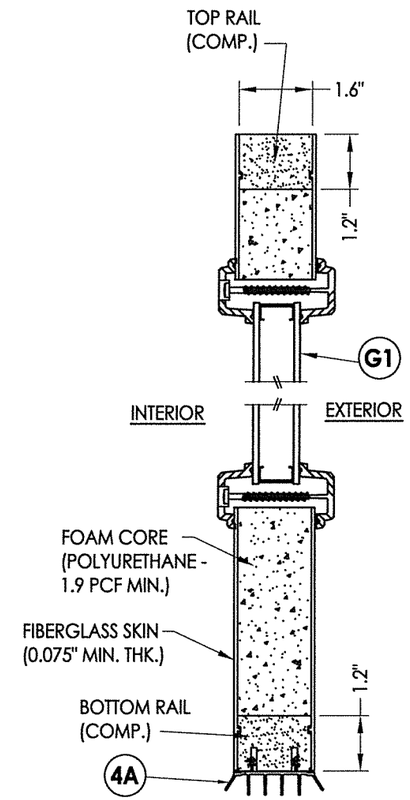

2/4 VERTICAL CROSS SECTION

STATE OF FLORIDA
LYNDON F. SCHMIDT
LICENSE No. 43409
PROFESSIONAL ENGINEER

August 11, 2020

Documents Prepared By:
Lyndon F. Schmidt
P.E. No. 43409

BUILDING CONSULTANTS, INC.
P.O. Box 230, Valrico, FL 33595
Phone No.: 813.659.9197
FBPE Registry No. 9813

PRODUCT: DUNBARTON REDITUFF ACHIEVER STEEL FRAME SYSTEM

PART OR ASSEMBLY: DOOR PANEL DETAILS

NO.	DATE	REVISIONS	BY
3	8/11/20	UPDATE TO 7th ED. (2020) FBC	DAC
2	9/29/17	UPDATE TO 6TH ED. (2017) FBC	LFS
1	3/23/15	UPDATE TO 5TH ED. (2014) FBC	JK

DATE: 03/14/12
SCALE: N.T.S.
DWG. BY: JK
CHK. BY: LFS
DRAWING NO.: FL-15362.5
SHEET 4 OF 13

© 2012 R.W. BUILDING CONSULTANTS INC.

\\dc01\rwbc\Clients\Dunbarton Permanent\A - Florida Product Approvals\FL-15362 - Swinging Ext Doors - Redituff and Achiever\C - Drawings\FL-15362 (2020)\FL-15362.1-6.dwg

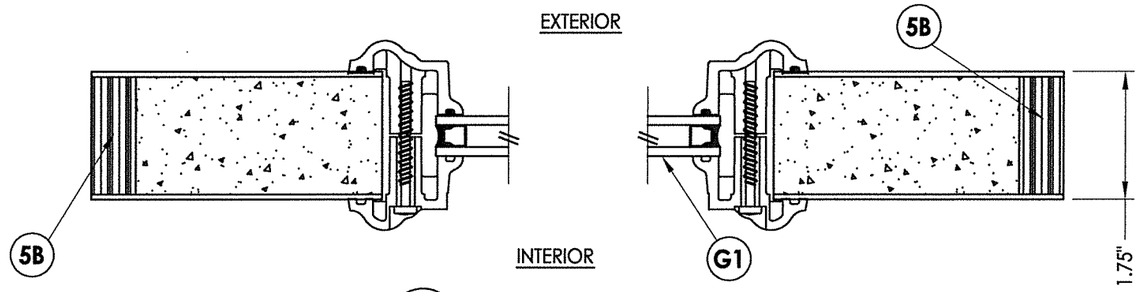

1/5 **HORIZONTAL CROSS SECTION**

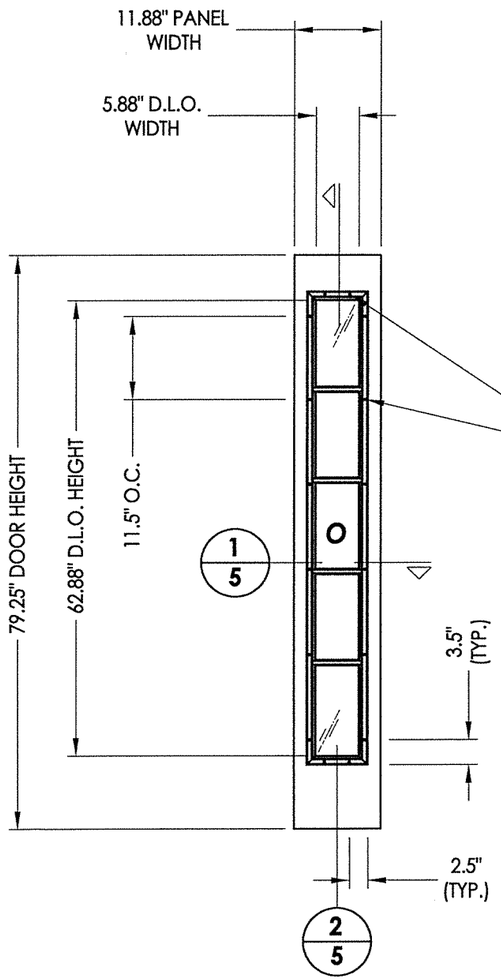

FIBERGLASS PANEL

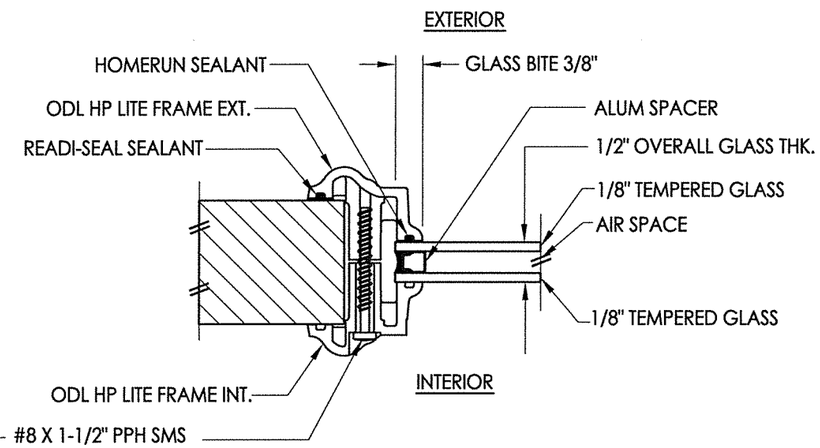

G1 **GLAZING DETAIL**

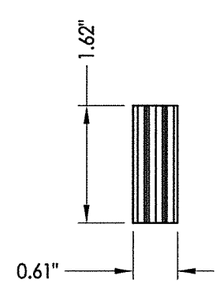

5B **STILE** LVL

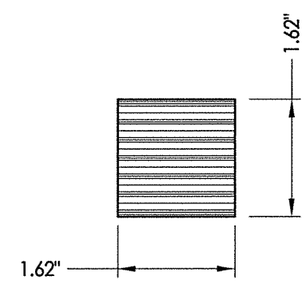

5A **TOP AND BOTTOM RAIL** LVL

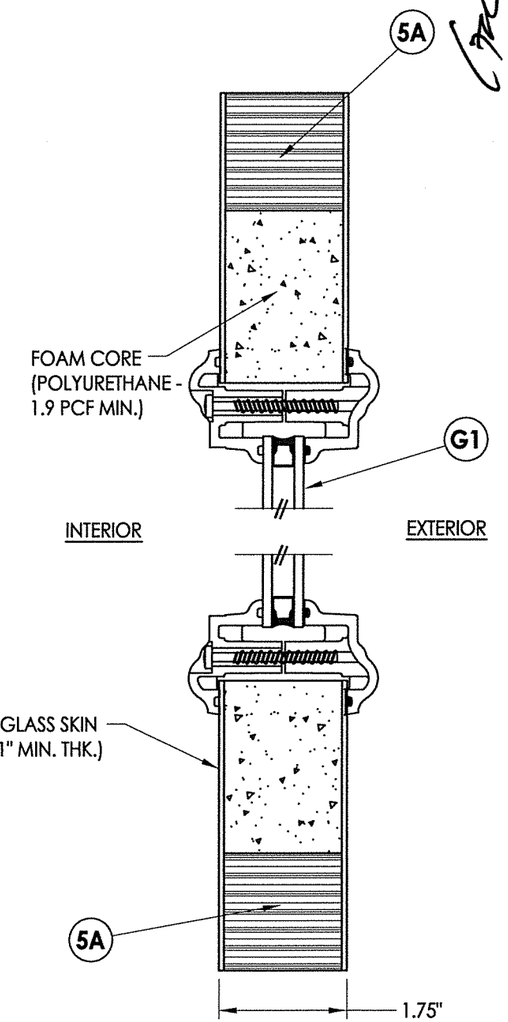

2/5 **VERTICAL CROSS SECTION**

L. F. SCHMIDT LICENSE No. 43409 STATE OF FLORIDA PROFESSIONAL ENGINEER

August 11, 2020

Documents Prepared By:
Lyndon F. Schmidt
P.E. No. 43409

RW BUILDING CONSULTANTS, INC.
P.O. Box 230, Valrico, FL 33595
Phone No.: 813.659.9197
FBPE Registry No. 9813

PRODUCT: DUNBARTON ACHEIVER STEEL FRAME SYSTEM

PART OR ASSEMBLY: SIDELITE PANEL DETAILS

NO.	DATE	REVISIONS	BY
3	8/11/20	UPDATE TO 7th ED. (2020) FBC	DAC
2	9/29/17	UPDATE TO 6TH ED. (2017) FBC	LFS
1	3/23/15	UPDATE TO 5TH ED. (2014) FBC	JK

DATE: 03/14/12
SCALE: N.T.S.
DWG. BY: JK
CHK. BY: LFS
DRAWING NO.: FL-15362.5
SHEET 5 OF 13

© 2012 R.W. BUILDING CONSULTANTS INC.

\\dc01\rwbc\Clients\Dunbarton Permanent\A - Florida Product Approvals\FL-15362 - Swinging Ext Doors - Redituff and Achiever\C - Drawings\FL-15362 (2020)\FL-15362.1-6.dwg

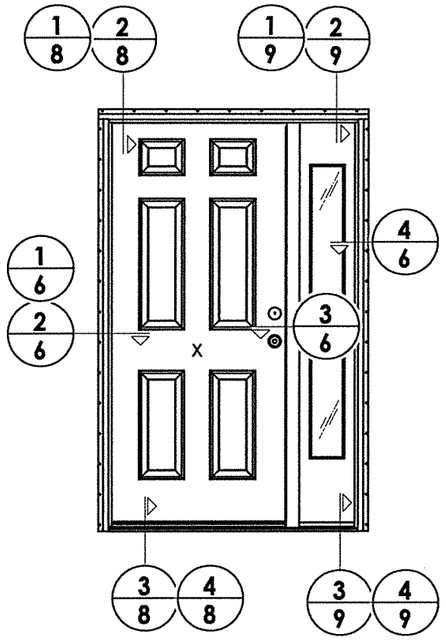

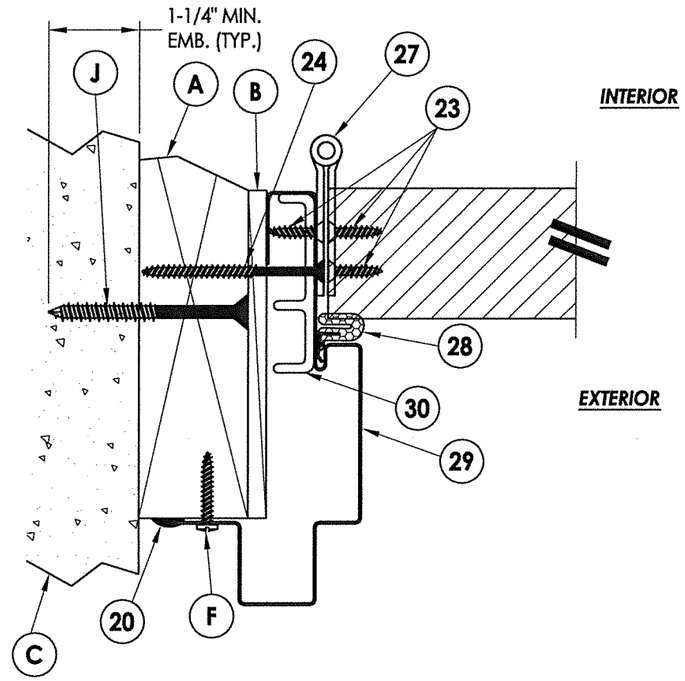

1/6 HORIZONTAL CROSS SECTION
2X Masonry construction

INTERIOR

EXTERIOR

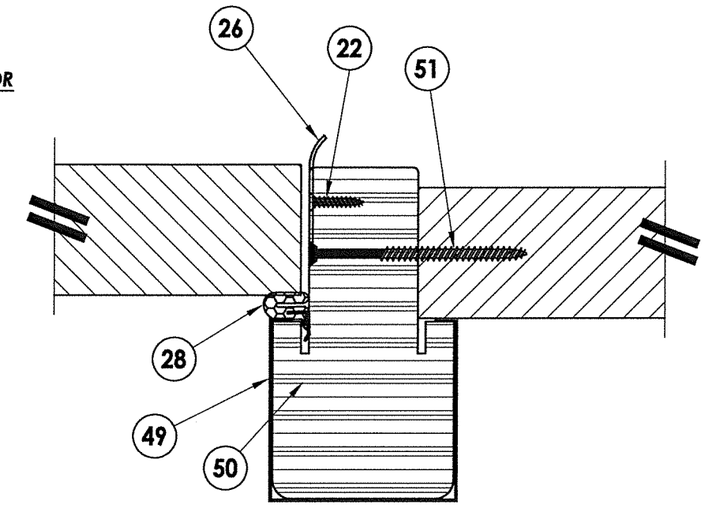

3/6 HORIZONTAL CROSS SECTION

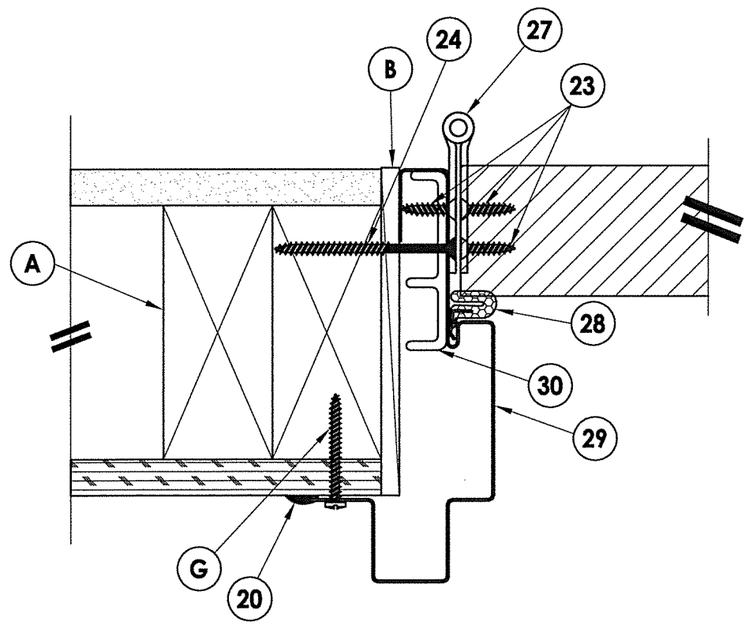

2/6 HORIZONTAL CROSS SECTION
2X Stud construction

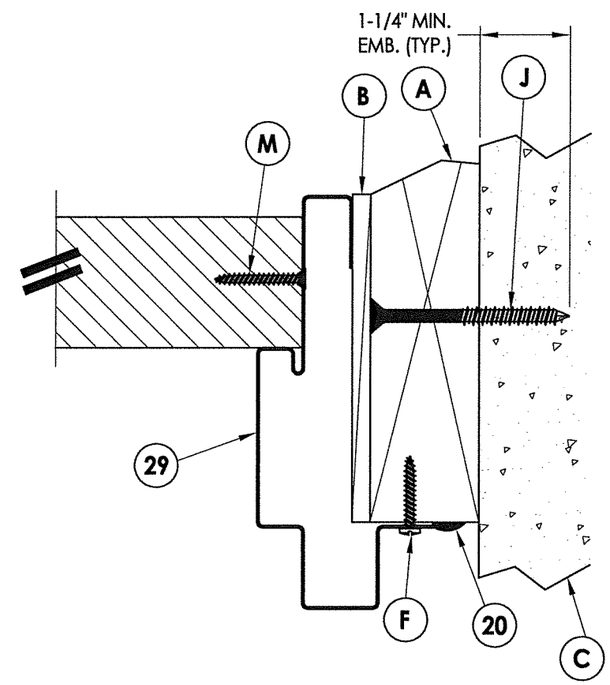

4/6 HORIZONTAL CROSS SECTION
2X Masonry construction

STATE OF FLORIDA
L. F. SCHMIDT
LICENSE
No. 43409
PROFESSIONAL ENGINEER

August 11, 2020

Documents Prepared By:
Lyndon F. Schmidt
P.E. No. 43409

R.W. BUILDING CONSULTANTS, INC.
P.O. Box 230, Valrico, FL 33595
Phone No.: 813.659.9197
FBPE Registry No. 9813

PRODUCT: DUNBARTON ACHIEVER STEEL FRAME SYSTEM

PART OR ASSEMBLY: HORIZONTAL CROSS SECTIONS

NO.	DATE	REVISIONS	BY
3	8/11/20	UPDATE TO 7th ED. (2020) FBC	DAC
2	9/29/17	UPDATE TO 6TH ED. (2017) FBC	LFS
1	3/23/15	UPDATE TO 5TH ED. (2014) FBC	JK

DATE: 03/14/12
SCALE: N.T.S.
DWG. BY: JK
CHK. BY: LFS
DRAWING NO.: FL-15362.5
SHEET 6 OF 13

© 2012 R.W. BUILDING CONSULTANTS INC.

\\dc01\rwbc\Clients\Dunbarton Permanent\A - Florida Product Approvals\FL-15362 - Swinging Ext Doors - Redituff and Achiever\C - Drawings\FL-15362 (2020)\FL-15362.1-6.dwg

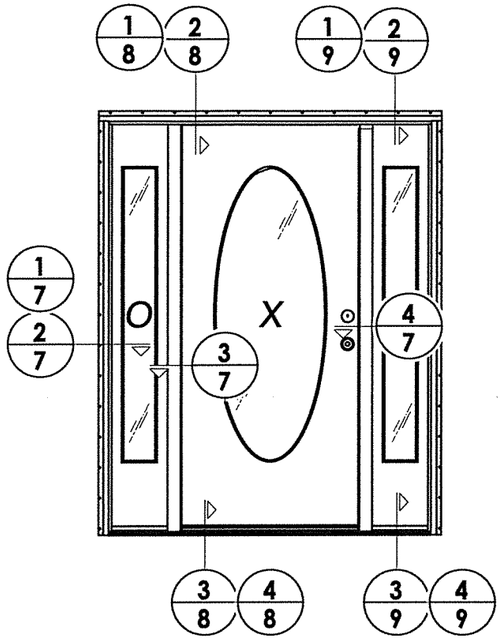

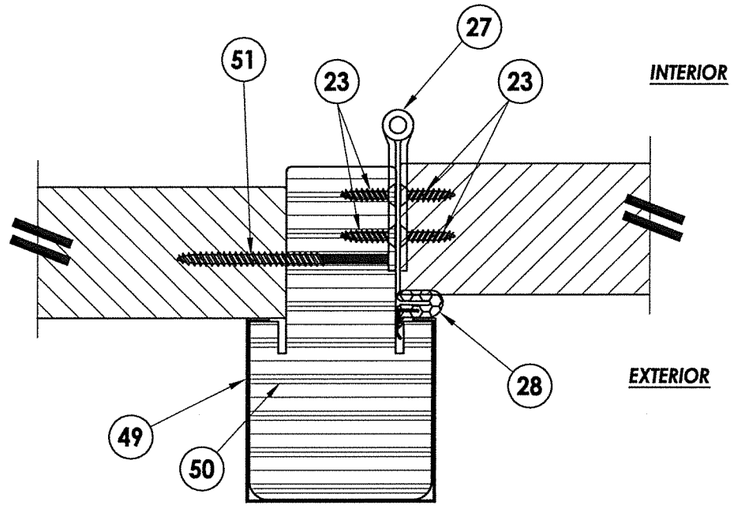

3/7 **HORIZONTAL CROSS SECTION**

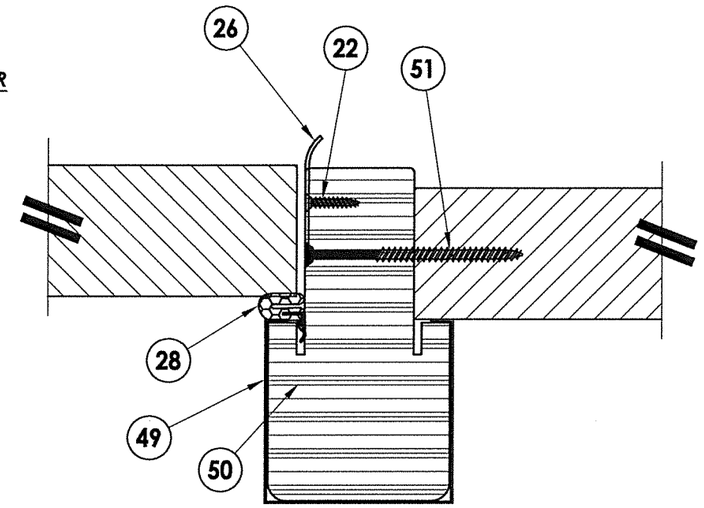

4/7 **HORIZONTAL CROSS SECTION**

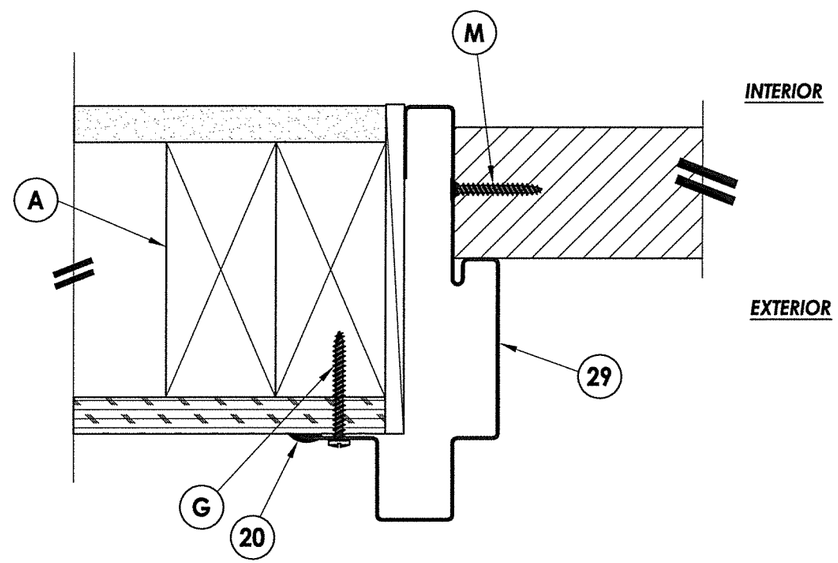

1/7 **HORIZONTAL CROSS SECTION**
2X Stud construction

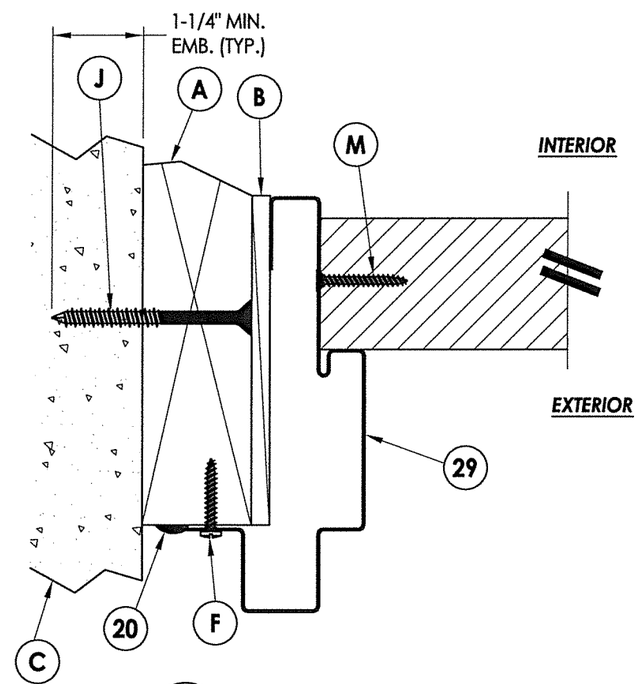

2/7 **HORIZONTAL CROSS SECTION**
2X Masonry construction

L. F. SCHMIDT
LICENSE
No. 43409
STATE OF FLORIDA
PROFESSIONAL ENGINEER

August 11, 2020

Documents Prepared By:
Lyndon F. Schmidt
P.E. No. 43409

RW BUILDING CONSULTANTS, INC.
P.O. Box 230, Valrico, FL 33595
Phone No.: 813.659.9197
FBPE Registry No. 9813

PRODUCT: DUNBARTON
ACHIEVER STEEL FRAME SYSTEM

PART OR ASSEMBLY:
HORIZONTAL CROSS SECTIONS

REVISIONS

NO.	DATE	BY
3	8/11/20	DAC
2	9/29/17	LFS
1	3/23/15	JK

UPDATE TO 7th ED. (2020) FBC
UPDATE TO 6TH ED. (2017) FBC
UPDATE TO 5TH ED. (2014) FBC

DATE: 03/14/12
SCALE: N.T.S.
DWG. BY: JK
CHK. BY: LFS
DRAWING NO.: FL-15362.5
SHEET 7 OF 13

© 2012 R.W. BUILDING CONSULTANTS INC.

\\dc01\rwbc\Clients\Dunbarton Permanent\A - Florida Product Approvals\FL-15362 - Swinging Ext Doors - Redituff and Achiever\C - Drawings\FL-15362 (2020)\FL-15362.1-6.dwg

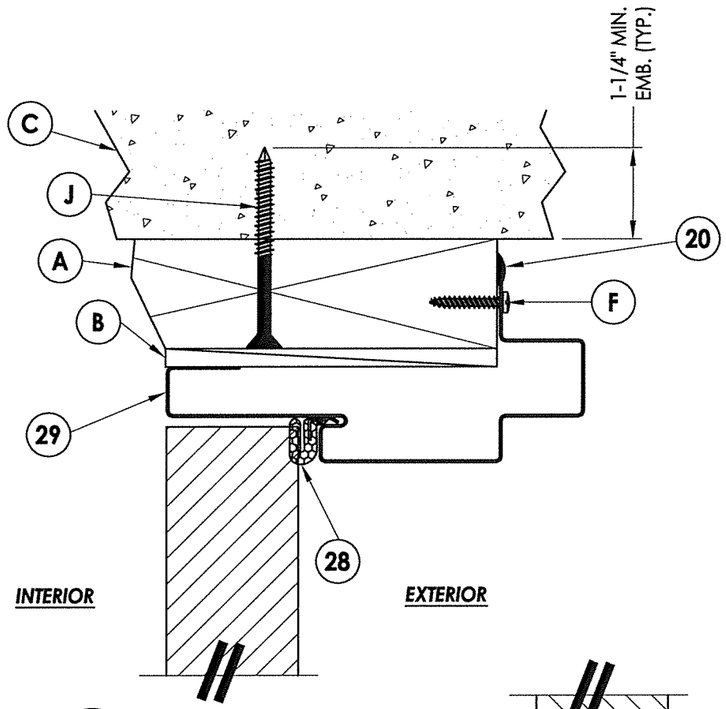

1/8 VERTICAL CROSS SECTION
2X Masonry construction

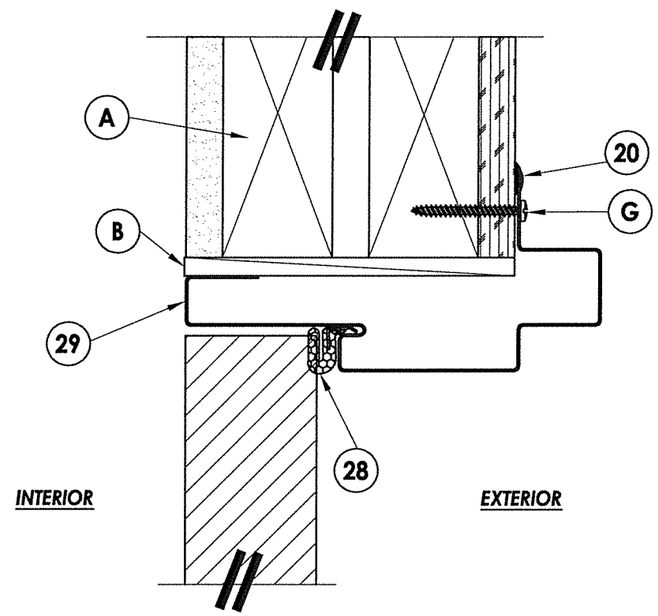

2/8 VERTICAL CROSS SECTION
2X Stud construction

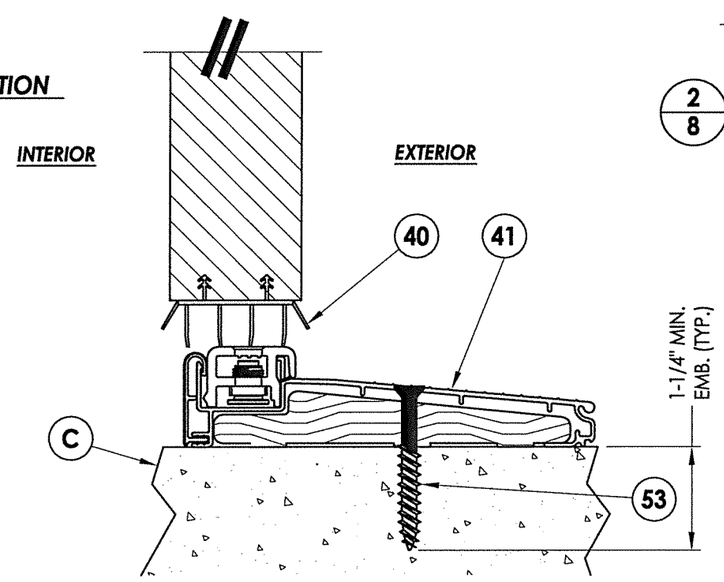

3/8 VERTICAL CROSS SECTION

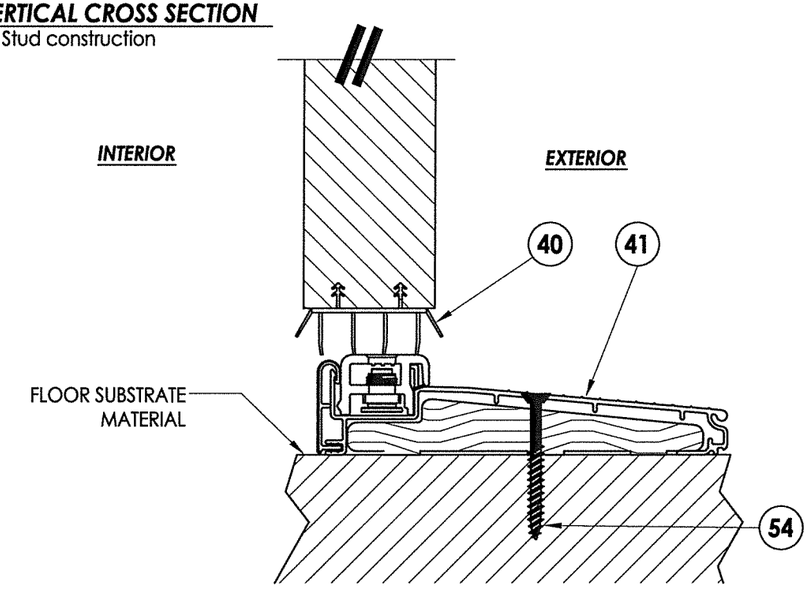

4/8 VERTICAL CROSS SECTION

L. F. SCHMIDT
LICENSE
No. 43409
STATE OF FLORIDA
PROFESSIONAL ENGINEER

August 11, 2020

Documents Prepared By:
Lyndon F. Schmidt
P.E. No. 43409

RW BUILDING CONSULTANTS, INC.
P.O. Box 230, Valrico, FL 33595
Phone No.: 813.659.9197
FBPE Registry No. 9813

PRODUCT: DUNBARTON
ACHIEVER STEEL FRAME SYSTEM

PART OR ASSEMBLY:
VERTICAL CROSS SECTIONS

REVISIONS

NO.	DATE		BY
3	8/11/20	UPDATE TO 7th ED. (2020) FBC	DAC
2	9/29/17	UPDATE TO 6TH ED. (2017) FBC	LFS
1	3/23/15	UPDATE TO 5TH ED. (2014) FBC	JK

DATE: 03/14/12
SCALE: N.T.S.
DWG. BY: JK
CHK. BY: LFS
DRAWING NO.: FL-15362.5
SHEET 8 OF 13

© 2012 R.W. BUILDING CONSULTANTS INC.

\\dc01\rwbc\Clients\Dunbarton Permanent\A - Florida Product Approvals\FL-15362 - Swinging Ext Doors - Redituff and Achiever\C - Drawings\FL-15362 (2020)\FL-15362.1-6.dwg

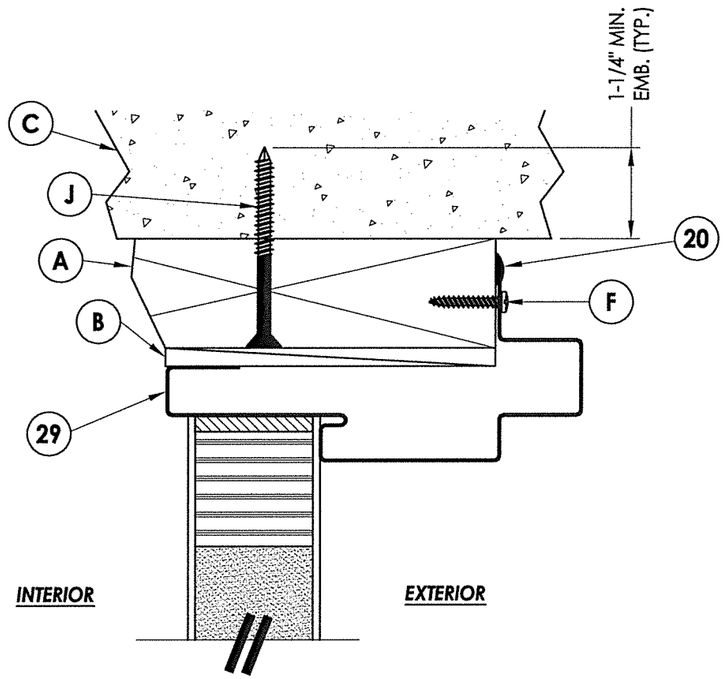

1/9 **VERTICAL CROSS SECTION**
2X Masonry construction

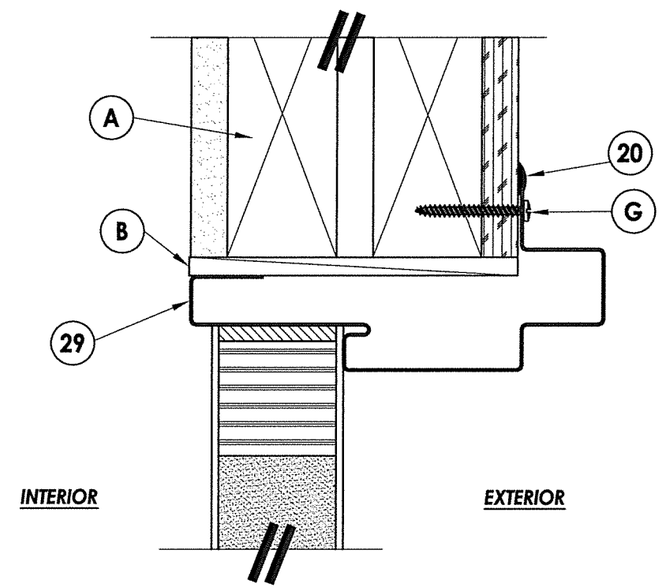

2/9 **VERTICAL CROSS SECTION**
2X Stud construction

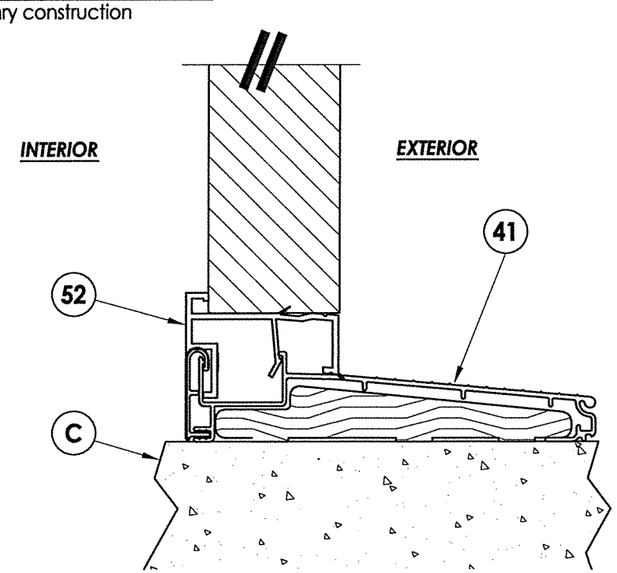

3/9 **VERTICAL CROSS SECTION**

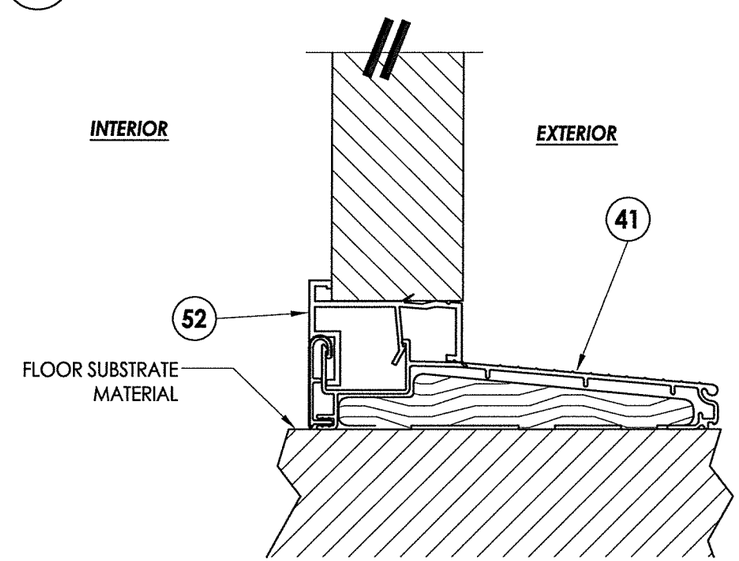

4/9 **VERTICAL CROSS SECTION**

L. F. SCHMIDT
LICENSE
No. 43409
STATE OF FLORIDA
PROFESSIONAL ENGINEER

August 11, 2020

Documents Prepared By:
Lyndon F. Schmidt
P.E. No. 43409

RW BUILDING CONSULTANTS, INC.
P.O. Box 230, Valrico, FL 33595
Phone No.: 813.659.9197
FBPE Registry No. 9813

PRODUCT: DUNBARTON ACHIEVER STEEL FRAME SYSTEM

PART OR ASSEMBLY: VERTICAL CROSS SECTIONS

REVISIONS

NO.	DATE		BY
3	8/11/20	UPDATE TO 7th ED. (2020) FBC	DAC
2	9/29/17	UPDATE TO 6TH ED. (2017) FBC	LFS
1	3/23/15	UPDATE TO 5TH ED. (2014) FBC	JK

DATE: 03/14/12
SCALE: N.T.S.
DWG. BY: JK
CHK. BY: LFS
DRAWING NO.: FL-15362.5
SHEET 9 OF 13

© 2012 R.W. BUILDING CONSULTANTS INC.

\\dc01\rwbc\Clients\Dunbarton Permanent\A - Florida Product Approvals\FL-15362 - Swinging Ext Doors - Redituff and Achiever\C - Drawings\FL-15362 (2020)\FL-15362.1-6.dwg

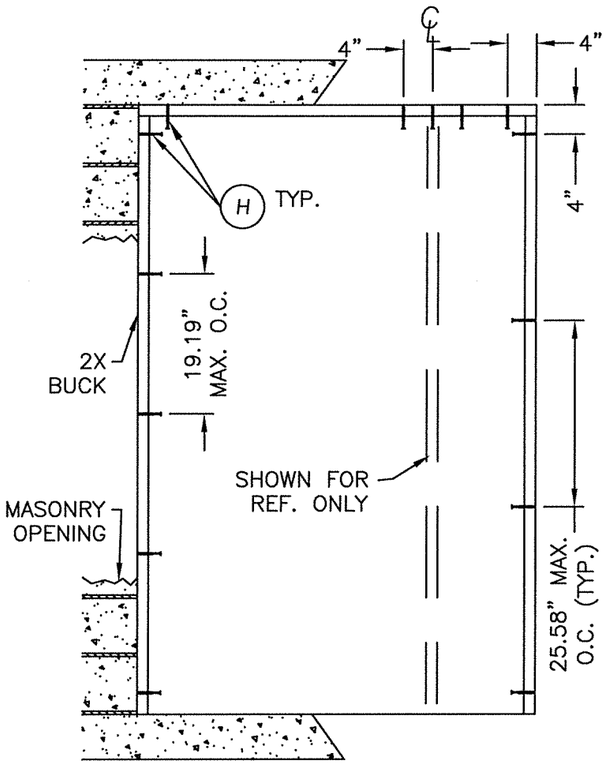

BUCK ANCHORING

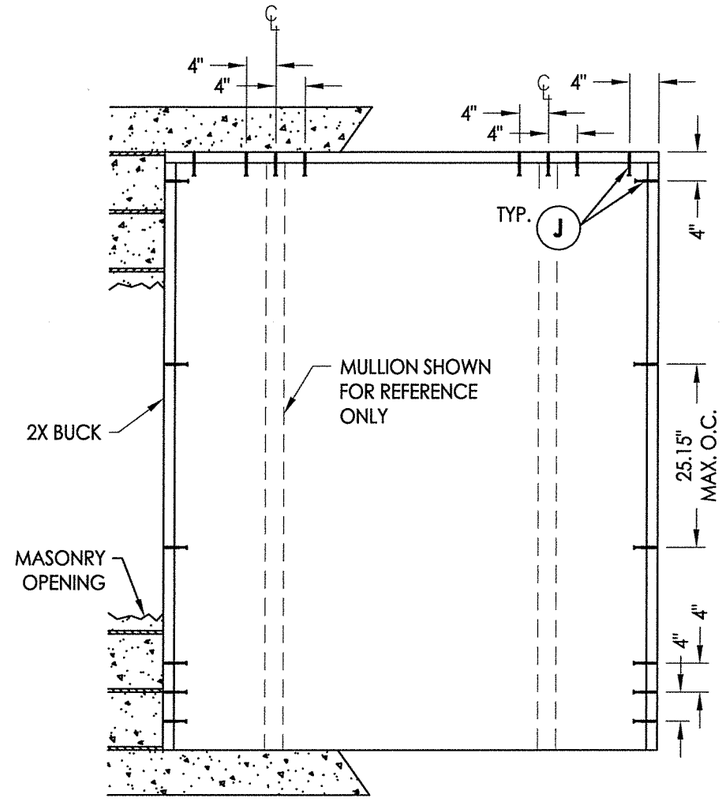

BUCK ANCHORING

CONCRETE ANCHOR NOTES:

1. *Concrete anchor locations at the corners may be adjusted to maintain the min. edge distance to mortar joints.*
2. *Concrete anchor locations noted as "MAX. ON CENTER" must be adjusted to maintain the min. edge distance to mortar joints, additional concrete anchors may be required to ensure the "MAX. ON CENTER" dimension are not exceeded.*
3. *Concrete anchor table:*

ANCHOR TYPE	ANCHOR SIZE	MIN. EMBEDMENT	MIN. CLEARANCE TO MASONRY EDGE	MIN. CLEARANCE TO ADJACENT ANCHOR
ITW TAPCON®	1/4"	1-1/4"	2"	4"
DeWALT ULTRACON®	1/4"	1-1/4"	1"	4"

L. F. SCHMIDT LICENSE No. 43409 STATE OF FLORIDA PROFESSIONAL ENGINEER

August 11, 2020

Documents Prepared By:
Lyndon F. Schmidt
P.E. No. 43409

BUILDING CONSULTANTS, INC.
P.O. Box 230, Valrico, FL 33595
Phone No.: 813.659.9197
FBPE Registry No. 9813

PRODUCT: *DUNBARTON ACHIEVER STEEL FRAME SYSTEM*

PART OR ASSEMBLY: *BUCK ANCHORING*

NO.	DATE	REVISIONS	BY
3	8/11/20	UPDATE TO 7TH ED. (2020) FBC	DAC
2	9/29/17	UPDATE TO 6TH ED. (2017) FBC	LFS
1	3/23/15	UPDATE TO 5TH ED. (2014) FBC	JK

DATE: 03/14/12
SCALE: N.T.S.
DWG. BY: JK
CHK. BY: LFS
DRAWING NO.: FL-15362.5
SHEET 10 OF 13

© 2012 R.W. BUILDING CONSULTANTS INC.

\\dc01\rwbc\Clients\Dunbarton Permanent\A - Florida Product Approvals\FL-15362 - Swinging Ext Doors - Redituff and Achiever\C - Drawings\FL-15362 (2020)\FL-15362.1-6.dwg

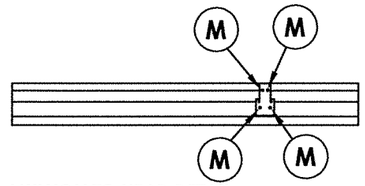

MULLION TO HEAD DETAIL

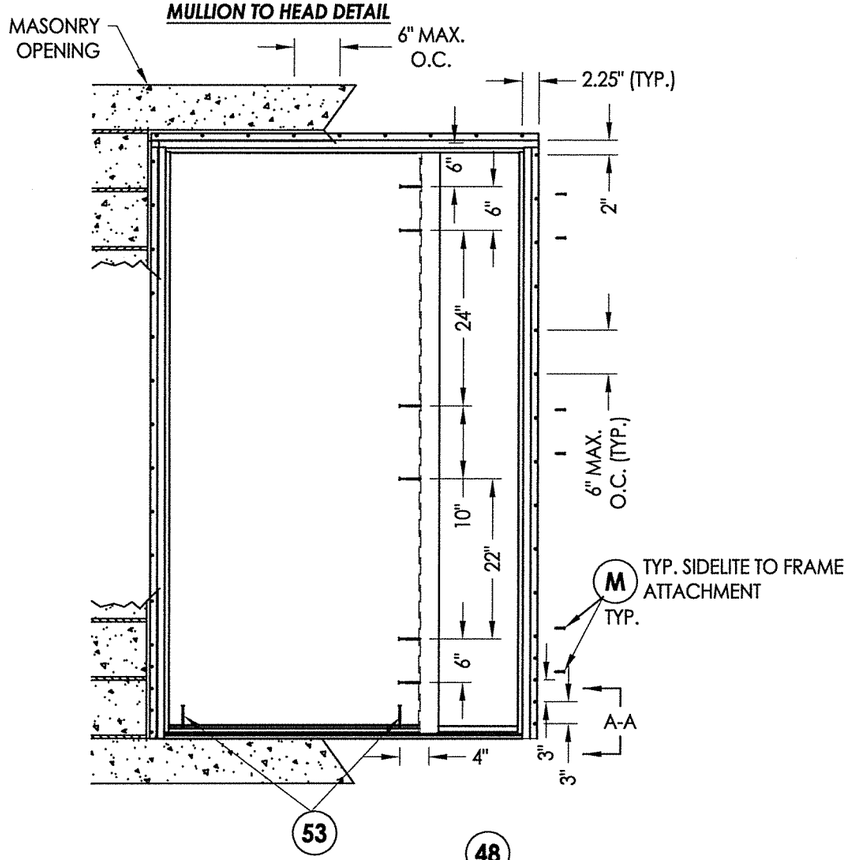

FRAME ANCHORING

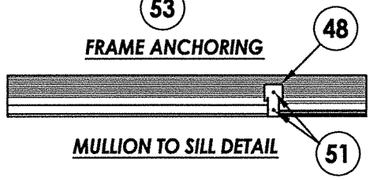

MULLION TO SILL DETAIL

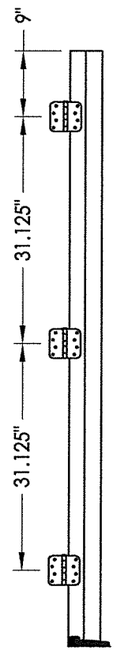

HINGE JAMB

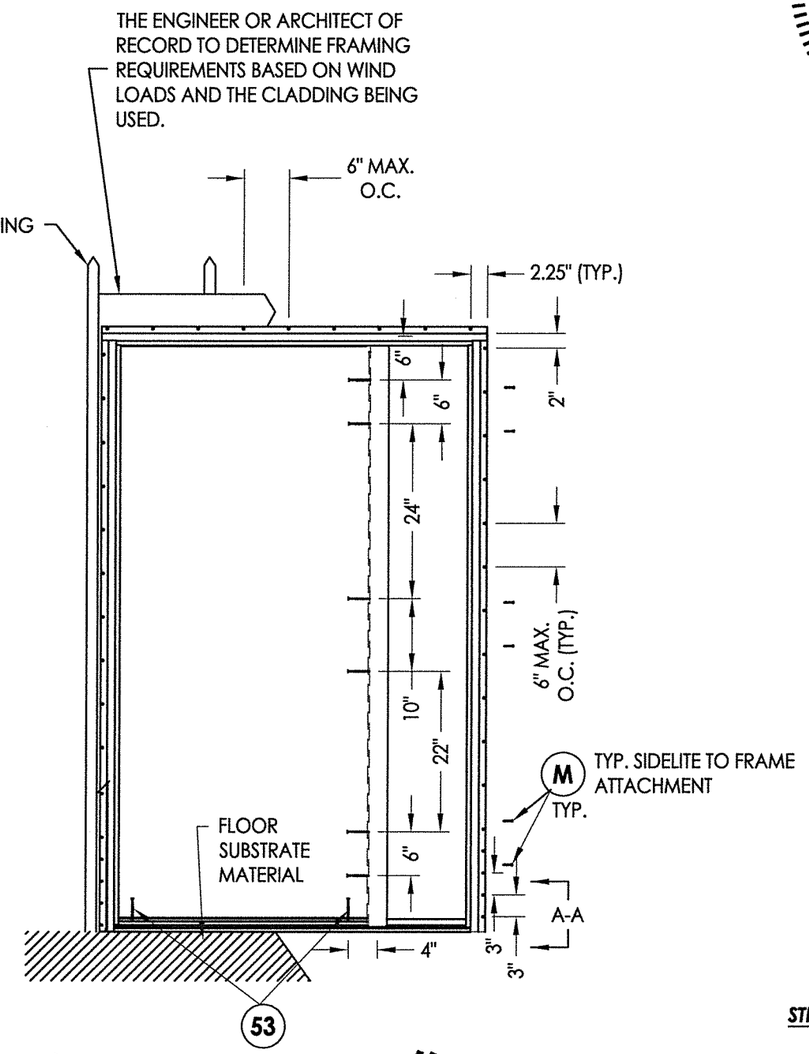

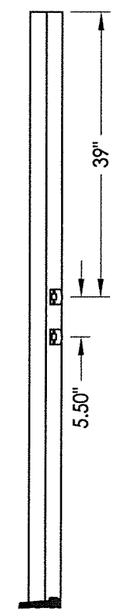

STRIKE JAMB

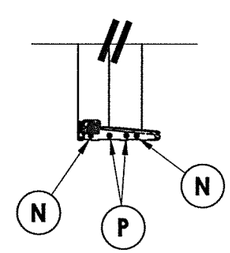

SECTION A-A

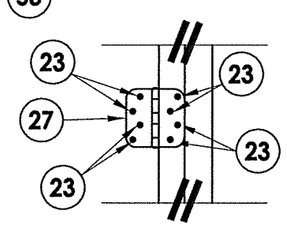

HINGE DETAIL

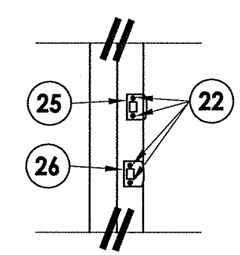

STRIKE DETAIL

CONCRETE ANCHOR NOTES:

1. *Substitution of equal concrete anchors from a different supplier may have different edge distance and center distance requirements.*
2. *Concrete anchor locations at the corners may be adjusted to maintain the min. edge distance to mortar joints. If concrete anchor locations noted as "MAX. ON CENTER" must be adjusted to maintain the min. edge distance to mortar joints, additional concrete anchors may be required to ensure the "MAX. ON CENTER" dimensions are not exceeded.*
3. *Concrete anchor table:*

ANCHOR TYPE	ANCHOR SIZE	MIN. EMBEDMENT	MIN. CLEARANCE TO MASONRY EDGE	MIN. CLEARANCE TO ADJACENT ANCHOR
DeWALT ULTRACON®	5/16"	1-1/4"	3-1/8"	5"

WOOD SCREW INSTALLATION NOTES:

1. *Maintain a minimum 5/8" edge distance, 1" end distance, & 1" o.c. spacing of wood screws to prevent the splitting of wood.*

L. F. SCHMIDT LICENSE No. 43409 STATE OF FLORIDA PROFESSIONAL ENGINEER

August 11, 2020

Documents Prepared By:
Lyndon F. Schmidt
P.E. No. 43409

BUILDING CONSULTANTS, INC.
P.O. Box 230, Valrico, FL 33595
Phone No.: 813.659.9197
FBPE Registry No. 9813

PRODUCT: DUNBARTON ACHIEVER STEEL FRAME SYSTEM

PART OR ASSEMBLY: FRAME ANCHORING

REVISIONS

NO.	DATE		BY
3	8/11/20	UPDATE TO 7TH ED. (2020) FBC	DAC
2	9/29/17	UPDATE TO 6TH ED. (2017) FBC	LFS
1	3/23/15	UPDATE TO 5TH ED. (2014) FBC	JK

DATE: 03/14/12
SCALE: N.T.S.
DWG. BY: JK
CHK. BY: LFS
DRAWING NO.: FL-15362.5
SHEET 11 OF 13

© 2012 R.W. BUILDING CONSULTANTS INC.

\\dc01\wbc\Clients\Dunbarton Permanent\A - Florida Product Approvals\FL-15362 - Swinging Ext Doors - Redituff and Achiever\C - Drawings\FL-15362 (2020)\FL-15362.1-6.dwg

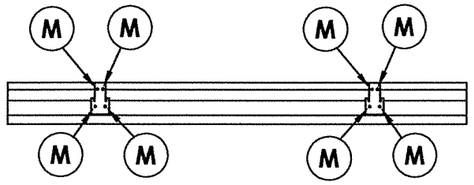

MULLION TO HEAD DETAIL

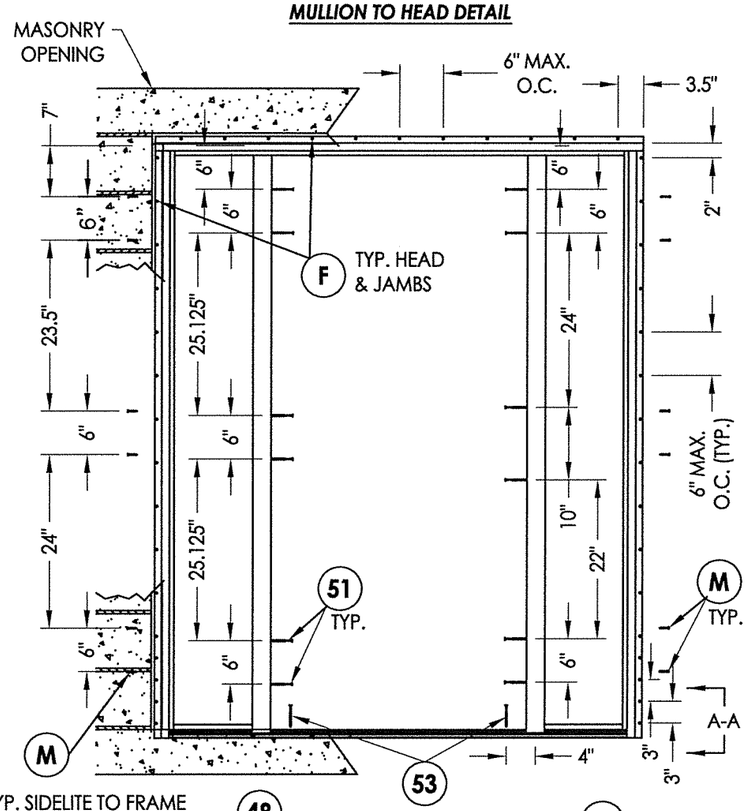

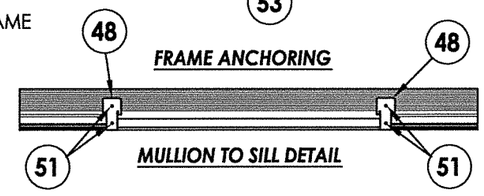

FRAME ANCHORING

MULLION TO SILL DETAIL

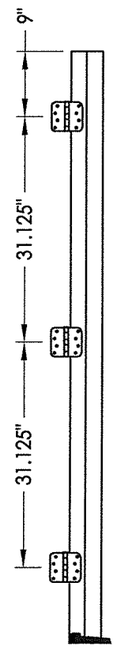

HINGE JAMB

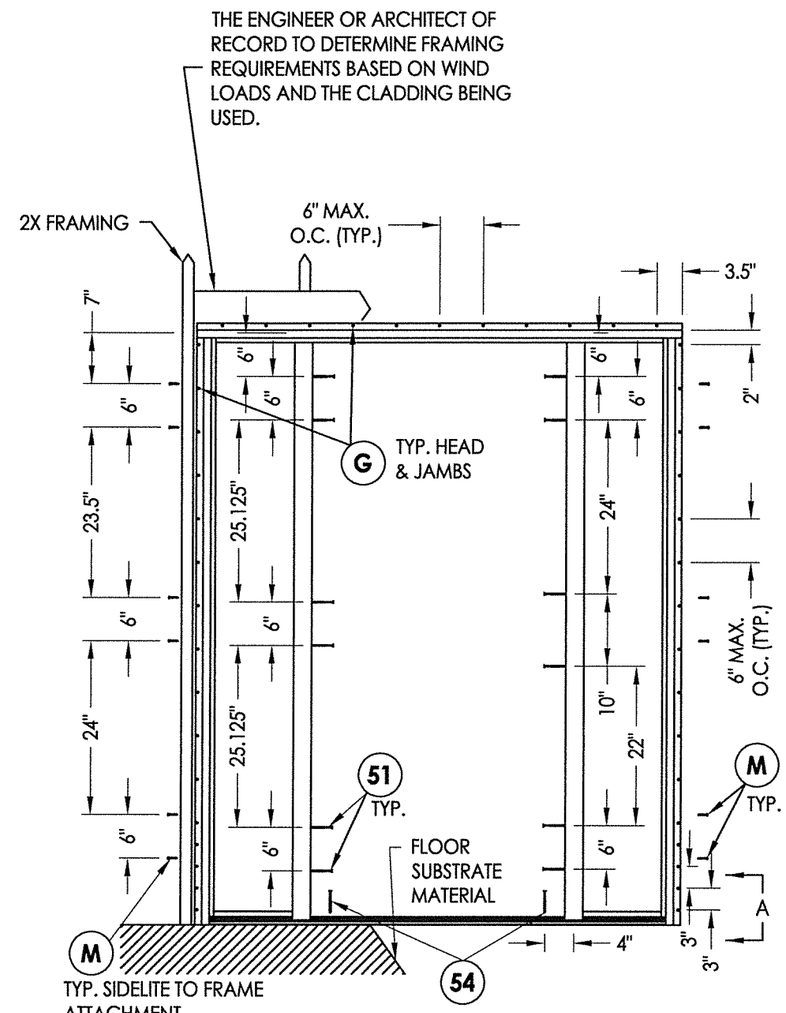

FRAME ANCHORING

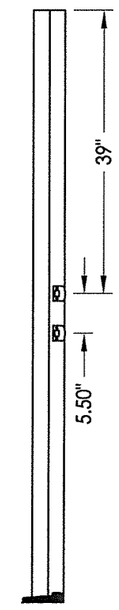

STRIKE JAMB

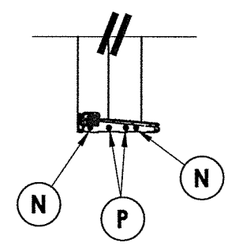

SECTION A-A

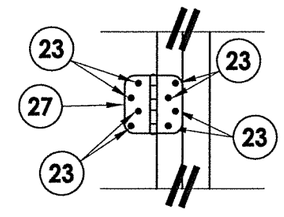

HINGE DETAIL

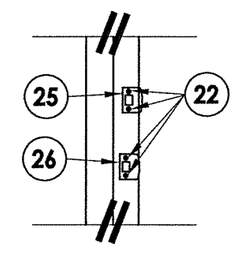

STRIKE DETAIL

CONCRETE ANCHOR NOTES:

1. *Substitution of equal concrete anchors from a different supplier may have different edge distance and center distance requirements.*
2. *Concrete anchor locations at the corners may be adjusted to maintain the min. edge distance to mortar joints. If concrete anchor locations noted as "MAX. ON CENTER" must be adjusted to maintain the min. edge distance to mortar joints, additional concrete anchors may be required to ensure the "MAX. ON CENTER" dimensions are not exceeded.*
3. *Concrete anchor table:*

ANCHOR TYPE	ANCHOR SIZE	MIN. EMBEDMENT	MIN. CLEARANCE TO MASONRY EDGE	MIN. CLEARANCE TO ADJACENT ANCHOR
DeWALT ULTRACON®	5/16"	1-1/4"	3-1/8"	5"

WOOD SCREW INSTALLATION NOTES:

1. *Maintain a minimum 5/8" edge distance, 1" end distance, & 1" o.c. spacing of wood screws to prevent the splitting of wood.*

L. F. SCHMIDT LICENSE No. 43409 STATE OF FLORIDA PROFESSIONAL ENGINEER

August 11, 2020

Documents Prepared By:
Lyndon F. Schmidt
P.E. No. 43409

RW BUILDING CONSULTANTS, INC.
P.O. Box 230, Valrico, FL 33595
Phone No.: 813.659.9197
FBPE Registry No. 9813

PRODUCT: DUNBARTON ACHIEVER STEEL FRAME SYSTEM

PART OR ASSEMBLY: FRAME ANCHORING

REVISIONS

NO.	DATE			
3	8/11/20	UPDATE TO 7TH ED. (2020) FBC	DAC	
2	9/29/17	UPDATE TO 6TH ED. (2017) FBC	LFS	
1	3/23/15	UPDATE TO 5TH ED. (2014) FBC	JK	
			BY	

DATE: 03/14/12
SCALE: N.T.S.
DWG. BY: JK
CHK. BY: LFS
DRAWING NO.: FL-15362.5
SHEET 12 OF 13

© 2012 R.W. BUILDING CONSULTANTS INC.

\\dc01\rwbc\Clients\Dunbarton Permanent\A - Florida Product Approvals\FL-15362 - Swinging Ext Doors - Redituff and Achiever\C - Drawings\FL-15362 (2020)\FL-15362.1-6.dwg

BILL OF MATERIALS

ITEM	DESCRIPTION	MATERIAL
A	2X BUCK SG >= 0.55	WOOD
B	1/4" MAX. SHIM SPACE	-
C	MASONRY - 3,000 PSI MIN. CONCRETE CONFORMING TO ACI 301 OR HOLLOW BLOCK CONFORMING TO ASTM C90	CONCRETE
F	#8 X 1" PPH SCREW (7/8" MIN. EMBEDMENT)	STEEL
G	#8 X 1-1/2" PPH SCREW (7/8" MIN. EMBEDMENT)	STEEL
J	1/4" X 2-3/4" DeWALT OR ITW CONCRETE SCREW	STEEL
M	#8 X 1-1/4" PPH SCREW	STEEL
N	#10 X 2-1/2" PPH WOOD SCREW	STEEL
P	#8 X 1-1/4" PPH SCREW	STEEL
20	SEALANT	SILICONE
22	#7 X 3/4" PFH SCREW	STEEL
23	#9 X 3/4" PFH WOOD SCREW	STEEL
25	DEADBOLT STRIKE PLATE	STEEL
26	LATCH STRIKE PLATE	STEEL
27	HINGE	STEEL
28	WEATHERSTRIP	FOAM
29	FRAME	STEEL
41	INSWING THRESHOLD	ALUM./WOOD
48	MULLION PAD SPACER	PVC
49	MULLION CAP	STEEL
50	MULLION	LVL
51	#10 X 3" PFH WS	STEEL
52	INSWING SIDELITE SPACER	PVC
53	5/16" X 2-1/4" DeWALT CONCRETE SCREW	STEEL
54	#12 X 2" PFH WOOD SCREW	STEEL

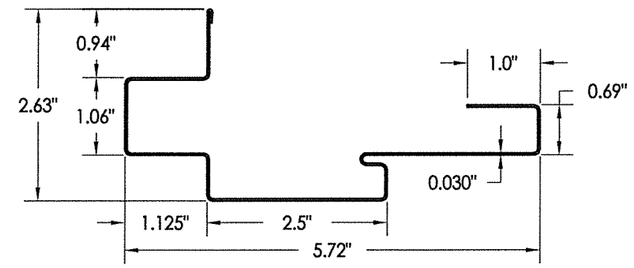

29 FRAME

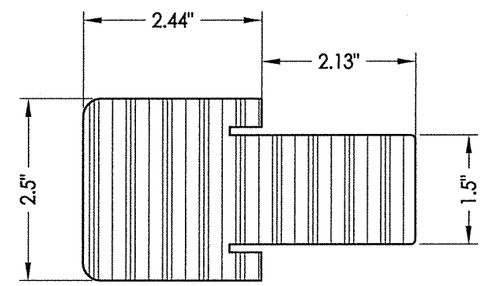

50 MULLION

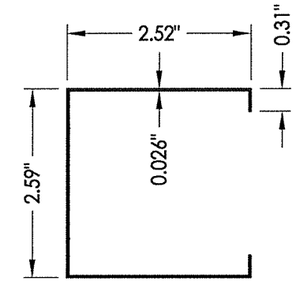

49 MULLION CAP

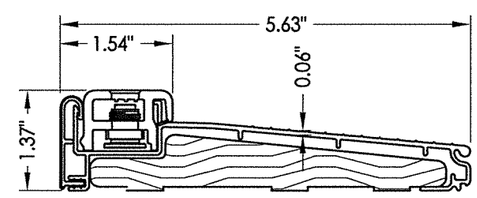

41 INSWING THRESHOLD

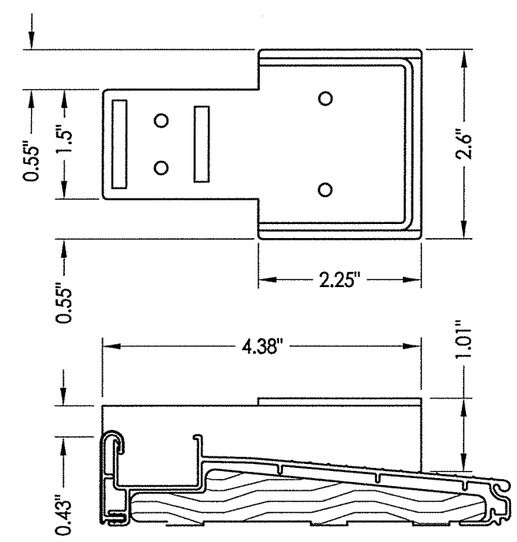

48 MULLION PAD SPACER

L. F. SCHMIDT
LICENSE
No. 43409
STATE OF FLORIDA
PROFESSIONAL ENGINEER

August 11, 2020

Documents Prepared By:
Lyndon F. Schmidt
P.E. No. 43409

BUILDING CONSULTANTS, INC.
P.O. Box 230, Valrico, FL 33595
Phone No.: 813.659.9197
FBPE Registry No. 9813

PRODUCT: DUNBARTON ACHIEVER STEEL FRAME SYSTEM

PART OR ASSEMBLY: BILL OF MATERIALS AND COMPONENTS

NO.	DATE		BY
3	8/11/20	UPDATE TO 7th ED. (2020) FBC	DAC
2	9/29/17	UPDATE TO 6TH ED. (2017) FBC	LFS
1	3/23/15	UPDATE TO 5TH ED. (2014) FBC	JK

REVISIONS

DATE: 03/14/12
SCALE: N.T.S.
DWG. BY: JK
CHK. BY: LFS
DRAWING NO.: FL-15362.5
SHEET 13 OF 13

© 2012 R.W. BUILDING CONSULTANTS INC.

\\dc01\rwbc\Clients\Dunbarton Permanent\A - Florida Product Approvals\FL-15362 - Swinging Ext Doors - Redituff and Achiever\C - Drawings\FL-15362 (2020)\FL-15362.1-6.dwg